KISTLER
measure. analyze. innovate.

Kistler LabAmp

Type 5165A

Charge amplifier and data acquisition unit for dynamic measurements

This universal laboratory charge amplifier can be used wherever dynamic signals[1] of mechanical quantities are measured with piezoelectric sensors, Piezotron sensors (IEPE) or sensors with voltage output. Piezoelectric sensors produce an electric charge which varies in direct proportion with the load acting on the sensor. The amplifier converts this charge directly into digital values or a proportional output voltage.

- 1 or 4 channel amplifier for piezoelectric sensors (charge), Piezotron sensors (IEPE) and voltage
- Integrated 24-bit data acquisition with up to 200 kSps per channel
- Continuous digital signal processing at minimal latency
- Fully flexible low-pass, high-pass and notch filter adjustment[1]
- Low-noise design
- TEDS (IEEE 1541.4) for Piezotron sensors
- 1 or 4 analog outputs with fully flexible 2-point scaling and internal routing
- Status indication per channel via LED
- Virtual channels for real-time calculations using one or more sensor channels[2]
- Configuration and control in a standard web-browser or via KiStudio Lab Software Package Type 2910B (including post-processing software jBEAM)
- Virtual instrument driver for LabVIEW
- Two Ethernet interfaces with included switch functionality
- PTP synchronization option for data acquisition with multiple devices[2]
- Integrated function generator[2]

Description

The Kistler LabAmp Type 5165A is not only an outstanding low-noise charge amplifier for dynamic signals but also a powerful data acquisition device delivering the digitized measurement values directly to a host computer for further analysis. It is configured and operated in a web-interface, conveniently accessible by a standard web-browser or via KiStudio Lab Software Package Type 2910B (including post-processing software jBEAM).

Thanks to advanced signal processing technology, the Kistler LabAmp Type 5165A offers impressive flexibility. The frequencies of the high-pass, low-pass and notch filters can be directly entered as numeric values in Hertz. The input signals can be flexibly routed to the analog outputs.

The graphical user interface not only offers a simple and intuitive way to configure the device but also displays different measurement values (e.g. live value, peak value, root mean square). The virtual channel functionality[2] allows real-time summation of different input signals. Furthermore, the browser-based data download allows the acquired data to be processed in an analysis software. For more advanced tasks or direct analysis, the amplifier can be integrated directly into LabVIEW thanks to the provided Virtual Instruments Driver.

For higher channel counts, the optional synchronization feature (PTP) allows acquiring data from multiple Type 5165A devices. Kistler LabAmp Type 5166A and Type 5167A amplifiers can be synchronized with the Type 5165A as well which allows for example the combined acquisition of dynamic IEPE signals and quasi-static signals from piezoelectric sensors. No additional cables are required.

[1] dynamic PE/IEPE signals from 0.1 Hz (time constant ≈1.6 s)/voltage signals from 0 Hz; not suitable for quasi-static charge measurements
[2] This functionality requires an extra license, see ordering key on the last page.

5165A_003-146e-12.23

The information corresponds to the current state of knowledge. Kistler reserves the right to make technical changes without advance notice. Liability for consequential damages arising from the application of Kistler products is excluded.

© 2014 ... 2023 Kistler Group, Eulachstrasse 22, 8408 Winterthur, Switzerland Tel. +41 52 224 11 11, info@kistler.com, www.kistler.com. Kistler Group products are protected by various intellectual property rights. For more details visit www.kistler.com

Technical data

Connections

Number of channels		
Type 5165A1		1
Type 5165A4		4
Input connector type		BNC neg.
Analog output connector type		BNC neg.
Ethernet interface		2xRJ45

Charge input

Measuring ranges	pC	±100 … 1,000,000
Frequency range (–3dB)	Hz	0.1 … 100,000
Input noise (typ.)		
1 Hz … 100 kHz		
100 pC	pC_{rms}	0.006
1,000 pC	pC_{rms}	0.008
10,000 pC	pC_{rms}	0.048
100,000 pC	pC_{rms}	0.67
1,000,000 pC	pC_{rms}	4.6
1 Hz … 10 kHz		
100 pC	pC_{rms}	0.006
1,000 pC	pC_{rms}	0.007
10,000 pC	pC_{rms}	0.03
100,000 pC	pC_{rms}	0.35
1,000,000 pC	pC_{rms}	2.8
Maximum input voltage	V	±30
Measurement uncertainty		
Measuring range <100 pC	%	<1
Measuring range ≥100 pC	%	<0.5
Crosstalk between channels	dB	≤–80
Sensor impedance	MΩ	>10

Piezotron input

Gain		1/10
Sensor supply voltage	V	22
Power supply	mA	4/10
Frequency range (–3dB)	Hz	0.1 … 100,000
Input noise (typ., 0 Ω shunt at input)		
1 Hz … 100 kHz		
Gain 10	μV_{rms}	6
Gain 1	μV_{rms}	45
1 Hz … 10 kHz		
Gain 10	μV_{rms}	3.5
Gain 1	μV_{rms}	28
Maximum input voltage	V	±30
Measurement uncertainty		
Gain 10	%	<1
Gain 1	%	<0.5
Crosstalk between channels	dB	≤–80

Voltage input

Input type		single-ended
Measuring range	V	±1 … 10
Input impedance	MΩ	10
Frequency range (–3dB)	Hz	0 … 100,000
Input noise (typ.)		
1 Hz … 100 kHz		
Measuring range 1 V	μV_{rms}	6
Measuring range 10 V	μV_{rms}	45
1 Hz … 10 kHz		
Measuring range 1 V	μV_{rms}	3.5
Measuring range 10 V	μV_{rms}	28
Max. input voltage	V	±30
Measurement uncertainty		
Measuring range <1 V	%	<1
Measuring range ≥1 V	%	<0.5
Crosstalk between channels	dB	≤–80

Voltage output

Nominal output range	V	±10
Output impedance	Ω	10
Max. common mode voltage between input and output ground	V	±14
Output noise (all ranges)		
1 Hz … 100 kHz, typ.	mV_{rms}	0.046
1 Hz … 10 kHz, typ.	mV_{rms}	0.041
Frequency range (–3dB)	Hz	0 … 100,000
Group delay (input to output, filters off)	µs	≤12
Zero error	mV	<±2
DAC resolution (analog out)	Bit	16

The information corresponds to the current state of knowledge. Kistler reserves the right to make technical changes without advance notice. Liability for consequential damages arising from the application of Kistler products is excluded.

© 2014 … 2023 Kistler Group, Eulachstrasse 22, 8408 Winterthur, Switzerland Tel. +41 52 224 11 11, info@kistler.com, www.kistler.com. Kistler Group products are protected by various intellectual property rights. For more details visit www.kistler.com

KISTLER
measure. analyze. innovate.

Technical data (continuation)

Data acquisition

ADC resolution	Bit	24
Internal ADC sampling rate	kSps	625
Acquisition data rate per channel (adjustable)	kSps	≤200

Note: For the data acquisition with ≥25 kSps an anti-aliasing filter is automatically set with a cut-off frequency of 0.3 … 0.45 x selected output update rate.

Digital high-pass filter

Order		1.
Cutoff-frequency (–3dB) selection in 0.1 Hz steps	Hz	≥0.1 … 10,000
Tolerance (typ.)	%	<1

Digital low-pass filter

Filter type		Bessel or Butterworth
Order		2./4.
Cutoff-frequency (–3dB) selection in 1 Hz steps	Hz	≥10
Tolerance (typ.)	%	<1

Digital notch filter

Center frequency selection in 1 Hz steps	Hz	≥10
Tolerance (typ.)	%	<1
Q factor		0.9 … 1,000

Application

The instrument has been designed for use in research, development and the laboratory. The Kistler LabAmp Type 5165A is the perfect choice wherever dynamic signals need to be measured precisely and with high resolution. Acceleration and vibration measurements, pulsating pressure applications or force measurements of fast machining procedures are just a few examples where the Kistler LabAmp Type 5165A can demonstrate his strengths.

Virtual channels [1)]

Number of channels		
Type 5165A1		1
Type 5165A4		4

Ethernet interface

Data rate	MBit	100

Power supply requirements

Supply voltage range	VDC	18 … 30
Power consumption	W	<15
Socket for barrel jack plug (IEC 60130-10 Type A)	mm	5.5x2.5x9.5
Power supply requirements		– galvanic isolation – PE and GND not connected

General data

Operating temperature range	°C	0 … 60
Storage temperature range	°C	–10 … 70
Rel. humidity, not condensing	%	≤90
Degree of protection (EN 60529)		IP20
Outer dimensions incl. feet and connectors (WxHxD)	mm	≈218x50x223
Weight	kg	1.2

1) This functionality requires an extra license, see ordering key on the last page

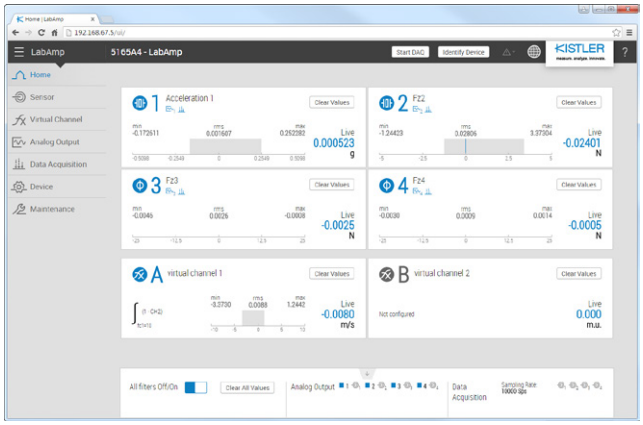

5165A_003-146e-12.23

The information corresponds to the current state of knowledge. Kistler reserves the right to make technical changes without advance notice. Liability for consequential damages arising from the application of Kistler products is excluded.

© 2014 … 2023 Kistler Group, Eulachstrasse 22, 8408 Winterthur, Switzerland Tel. +41 52 224 11 11, info@kistler.com, www.kistler.com. Kistler Group products are protected by various intellectual property rights. For more details visit www.kistler.com

KISTLER
measure. analyze. innovate.

Operation via Web-Interface

All settings are configured in a standard web-browser through the graphical user interface. Simply connect to the Kistler LabAmp Type 5165A by its network name and start working. A simple data acquisition is also implemented, offering a data download controlled by a start/stop button. In addition, an API is available to perform automated measuring tasks PC-based.

Built in function generator feature

The function generator can be used to generate a specific waveform that can be routed the analog outputs.
In addition to the three built-in waveforms (square, triangle, sine), the device can also generate arbitrary waveforms.
This feature is subject to a specific license. Licenses can be purchased from Kistler and activated under the menu item Maintenance - Software Licensing.
LabAmp firmware version 2.2.0 or higher is required.

The following attributes can be set:

Frequency	Hz	0.1 … 6 250
(Peak) Amplitude	V	0 … 10
Offset	V	–10 … 10
Duty Cycle	%	0 … 100
Wait between periods		0 … 10

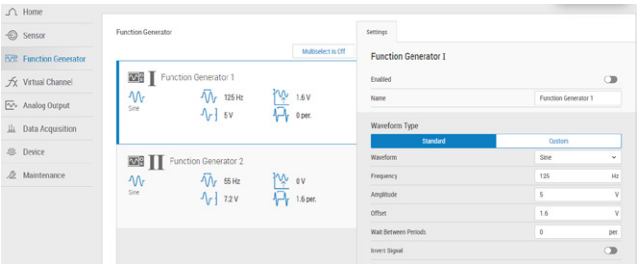

Operation via KiStudio Lab Software Package Type 2910B

The intuitive KiStudio Lab software enables the user to setup the LabAmp Type 5165A and acquire data in no time. If multiple LabAmp devices (Type 5165A, Type 5166A and Type 5167A, also in combination with KiDAQ systems) need to be synchronized, KiStudio Lab allows the configuration of the devices and acquisition of the synchronized data in a convenient and centralized way.

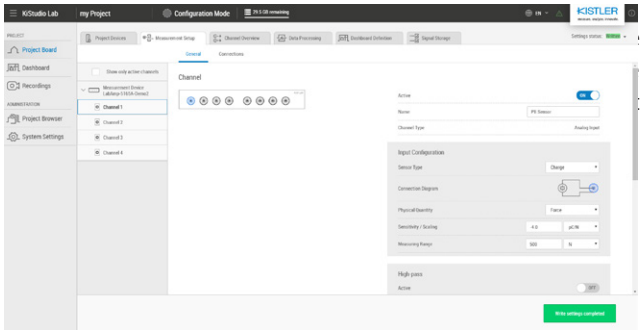

5165A_003-146e-12.23

The information corresponds to the current state of knowledge. Kistler reserves the right to make technical changes without advance notice. Liability for consequential damages arising from the application of Kistler products is excluded.

© 2014 … 2023 Kistler Group, Eulachstrasse 22, 8408 Winterthur, Switzerland
Tel. +41 52 224 11 11, info@kistler.com, www.kistler.com. Kistler Group products are protected by various intellectual property rights. For more details visit www.kistler.com

KISTLER
measure. analyze. innovate.

Block Diagram

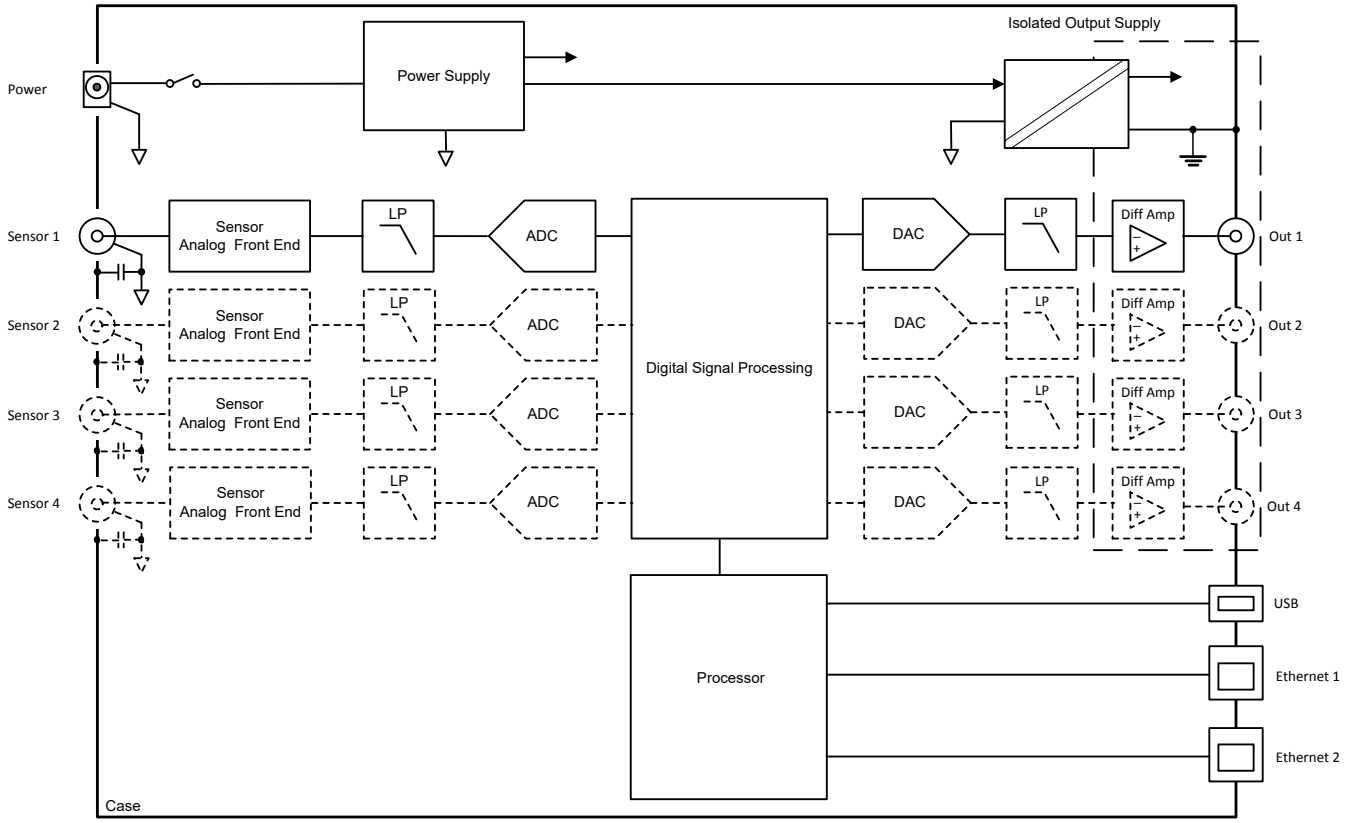

Fig. 1: Block diagram of the Kistler LabAmp Type 5165A

Dimensions

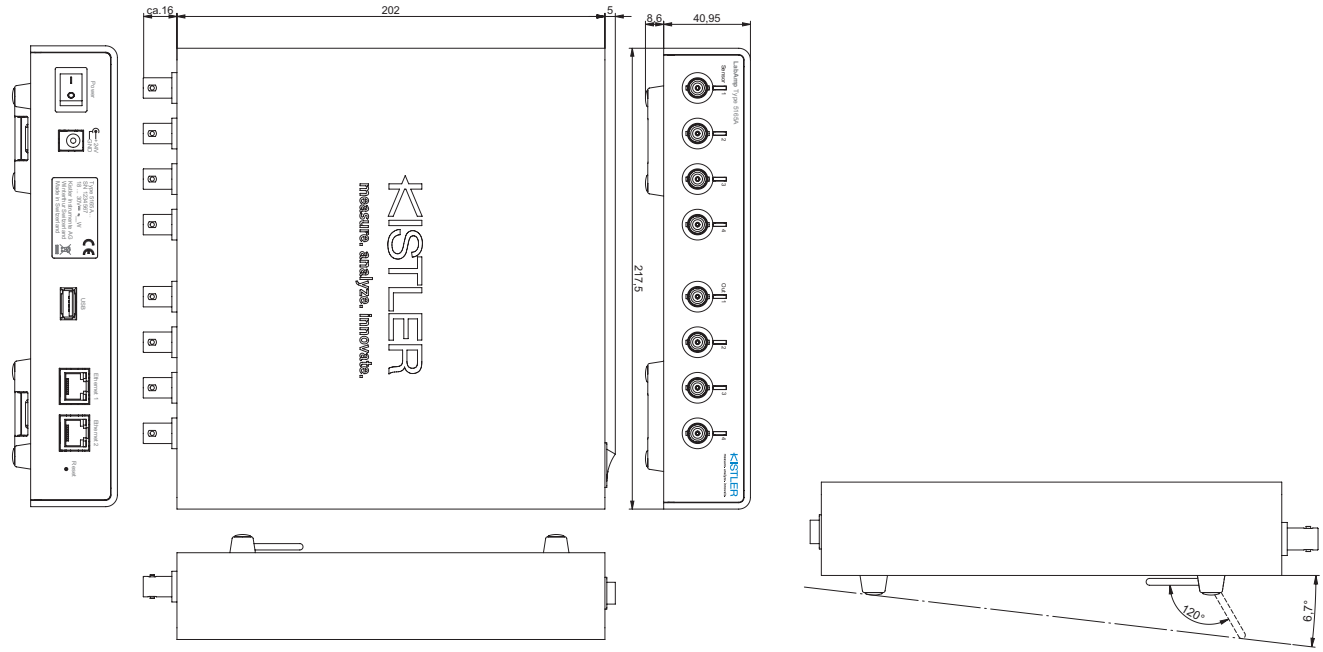

Fig. 2: Dimensions of Kistler LabAmp Type 5165A4

5165A_003-146e-12.23

The information corresponds to the current state of knowledge. Kistler reserves the right to make technical changes without advance notice. Liability for consequential damages arising from the application of Kistler products is excluded.

© 2014 ... 2023 Kistler Group, Eulachstrasse 22, 8408 Winterthur, Switzerland Tel. +41 52 224 11 11, info@kistler.com, www.kistler.com. Kistler Group products are protected by various intellectual property rights. For more details visit www.kistler.com

KISTLER
measure. analyze. innovate.

Included Accessories	Type/Mat. No.
• Calibration sheet	–
• Quick-start guide	–

Optional Accessories	Type/Mat. No.
• Power supply* 24 V incl. country-specific plug	5779A2
• 19" rack mounting tablet	5748A1
• Dummy panel for empty 19" position	5748A2
• KiStudio Lab Software Package (including post processing software jBEAM)	2910B
• DynoWare software Full license with HASP license key	2825A-03-2
• jBEAM Lab SW for Measurement Data Analysis	2897A

* Available as combined kit together with the amplifier

Ordering key

Type 5165A ☐☐☐☐☐☐

LabAmp

Single-channel	**1**
4 channels	**4**
SW order for existing device	**–**

Kit with amplifier, 24 V power supply, 2 m Ethernet cable	**K**
Amplifier only *or SW order for existing device*	**–**

Hardware & Software (new device with potential SW features)	**H**
SW order for existing device	**S**

No synchronization for data acquisition	**0**
PTP device synchronization	**1**

No virtual channel(s)	**0**
Virtual channel(s)	**1**

No function generator	**0**
Function generator license	**1**

Configuration examples:

5165A4KH100:	4-Channel device, incl. power supply & Ethernet cable, incl. PTP device synchronization
5165A1KH111:	1-Channel device, incl. power supply & Ethernet cable, incl. PTP device synchronization, virtual channels & function generator
5165A--S100:	PTP synchronization license for an existing device
5165A--S010:	Virtual Channels license for an existing device
5165A--S001:	Function Generator license for an existing device

5165A_003-146e-12.23

LabVIEW is a registered trade mark of National Instruments Corporation.

The information corresponds to the current state of knowledge. Kistler reserves the right to make technical changes without advance notice. Liability for consequential damages arising from the application of Kistler products is excluded.

© 2014 ... 2023 Kistler Group, Eulachstrasse 22, 8408 Winterthur, Switzerland Tel. +41 52 224 11 11, info@kistler.com, www.kistler.com. Kistler Group products are protected by various intellectual property rights. For more details visit www.kistler.com